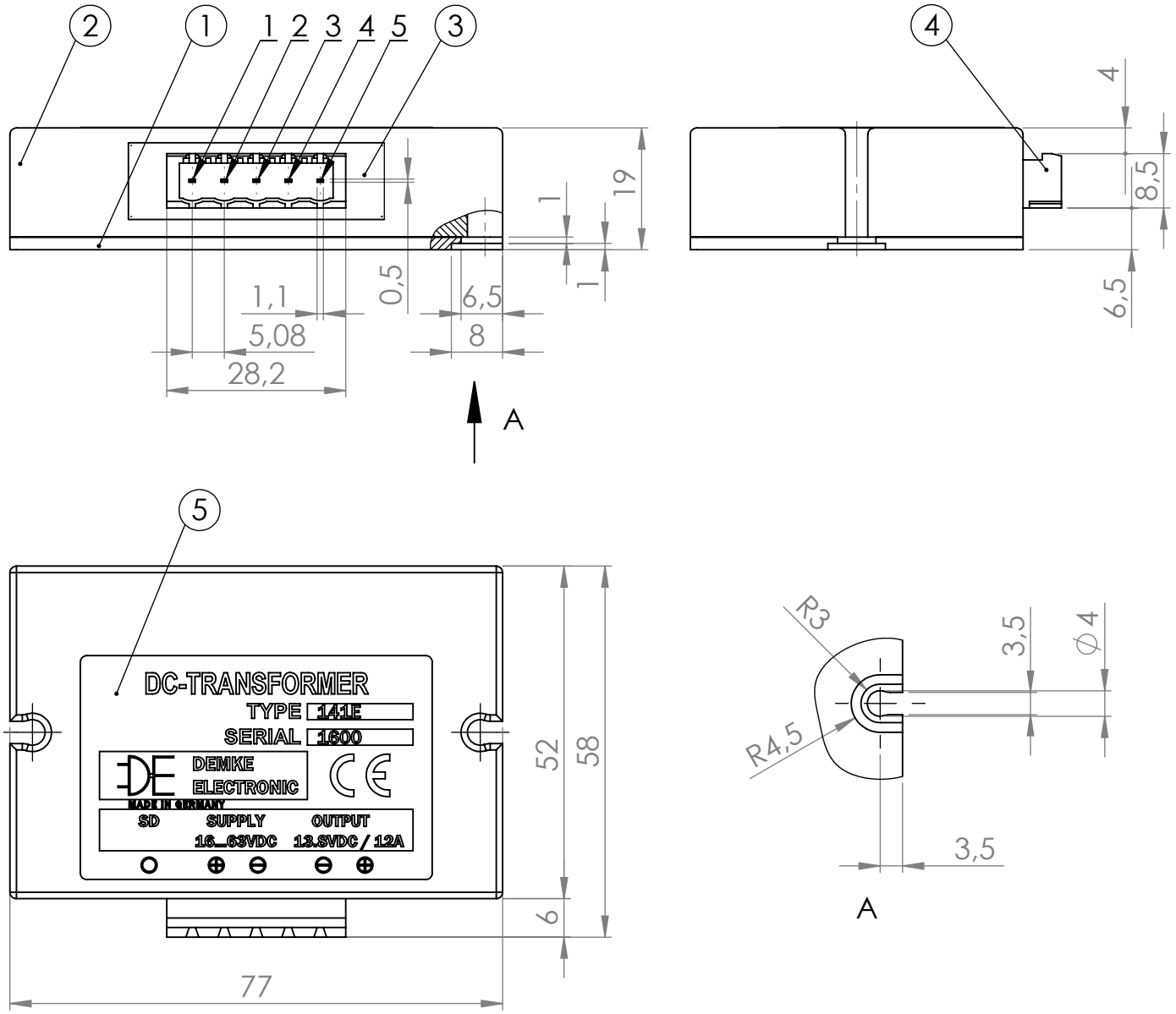

Pos.	Designation	Description	Quantity
1	Bottom plate	Aluminium (blank)	1
2	Casing lid	Aluminium (blank)	1
3	Cast	Insulating and heat-dissipating cast resin	1
4	Connector	CCA 2,5/8-G-5,08	1
5	Nameplate	Foilsticker with type description	1

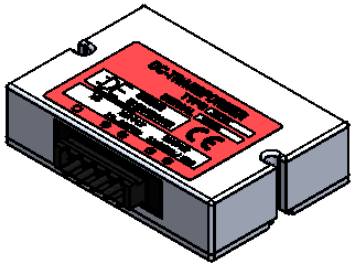

	Name	Date
Subscribed	N. Demke	30.11.2017
Production	Germany	

DEMKE ELECTRONIC

Designation:

DC-Transformer Type 141E-13.8-SD

Drawing number: 141.003

A4

Weight:

Scale: 1 : 1

Sheet 1 of 1